ASSEMBLY INSTRUCTION

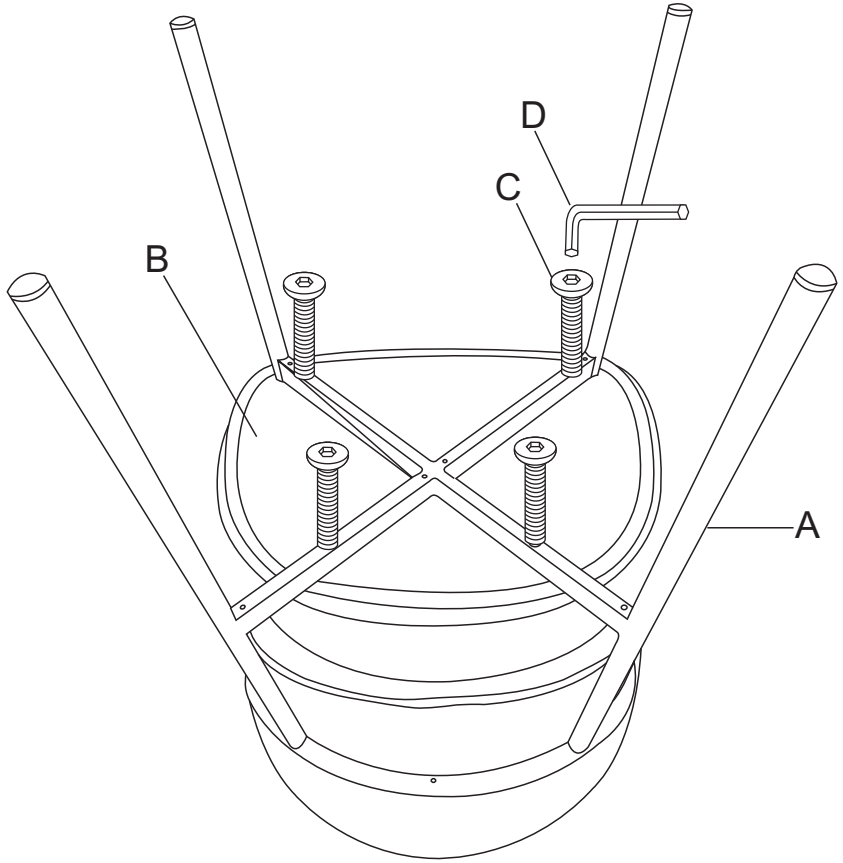

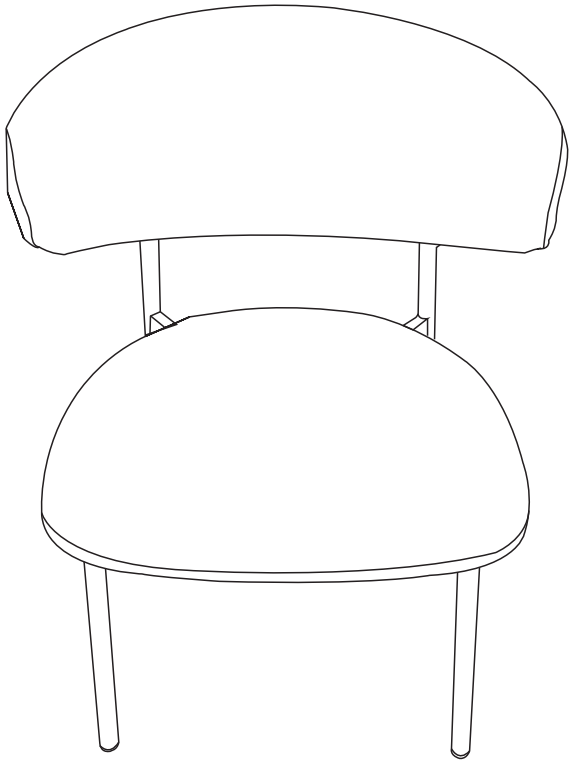

Ax1	Bx1	Cx4	Dx11
	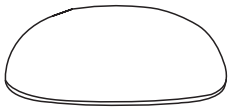	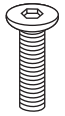 M6x45mm	