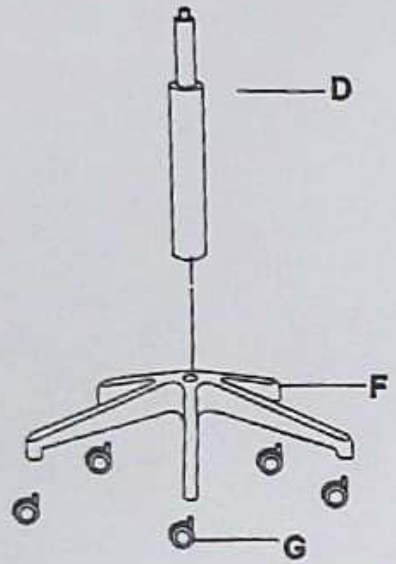

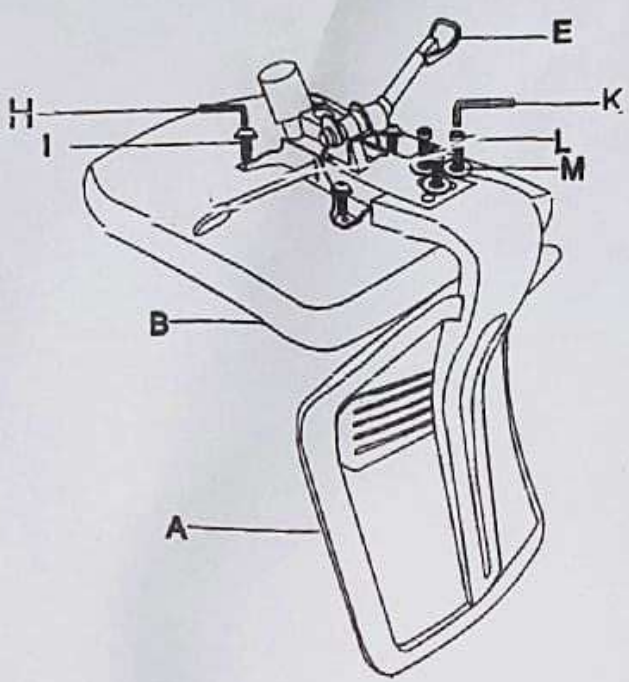

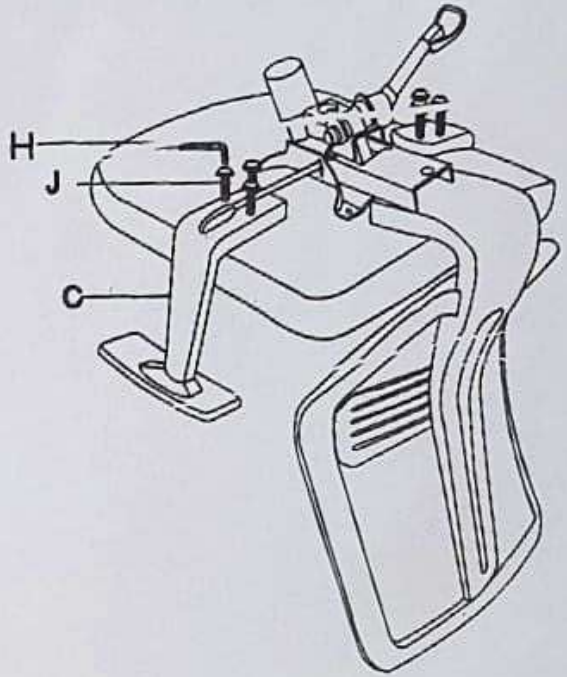





A 1	B 1	C 2	D 1
E 1	F 1	G 5	H 1
I 4	J 6	K 1	L 3
M 3			